7837

NUTONE
Model
920
RADIANT HEATER
Parts Price List

Effective Date
Jan. 1, 1959

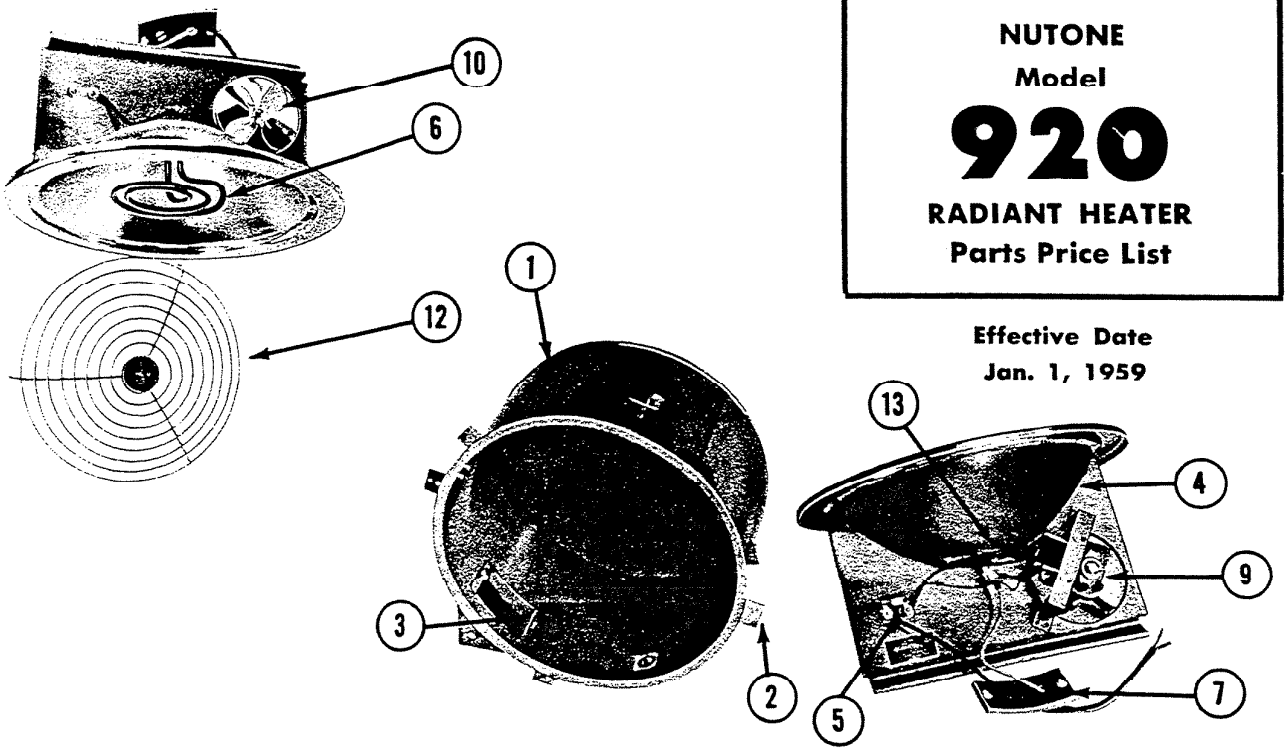

Model	Description
920	**920 RADIANT HEATER**

ILLUSTR. NO.	PART NO.	PART DESCRIPTION	LIST PRICE	NOTES
1	11010	A-Unit Housing Assembly with Ceiling Mtg. Brackets		
2	10173	Ceiling Mounting Brackets		
3	11320	Outlet Box		
4	11026	Reflector Assembly		Reflector assembly includes reflector, baffel assembly.
5	16480	Thermal Protector, WKK 19871-000		
6	14563	Shielded Heating Element		
7	10383	Outlet Box Cover		
8	11072	Motor and Fan Blade Assembly		
9	14772	Motor (3/6 Stack Motor)		
10	11061	Fan Blade		
11	11067	Hanger		
12	16069	Grille Assembly		
13	14569	Tinnerman Push On Clip		

NUTONE, INC., MADISON AND RED BANK ROADS • CINCINNATI 27, OHIO • U.S.A.

Printed in U.S.A.