PARTS LIST

EFFECTIVE DATE	MODEL	PRODUCT GROUP
MARCH 1982	DSW-938 NEW	HEATERS

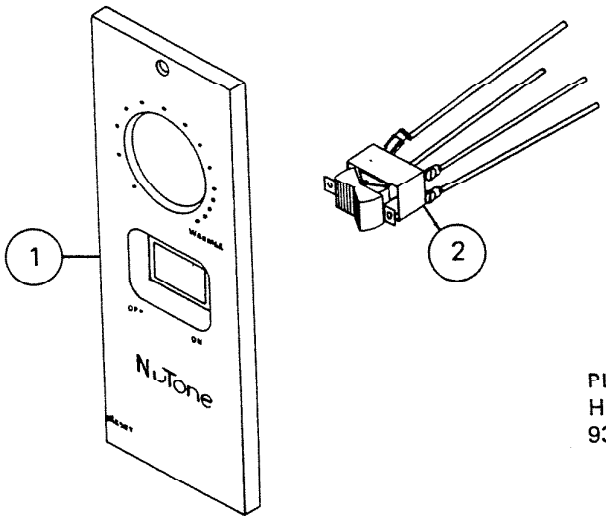

PLEASE NOTE: USED ON HEATER MODELS 9381, 9383, & 9385

REF.	ORIGINAL PART NO.	* PART DESCRIPTION	MODEL USED ON	CURRENT REPLACEMENT PART NO
1	6387-A	CONTROL PANEL	DSW-938	6387A-000
2	6388A	SWITCH ASSEMBLY	DSW-938	6388A-000

NuTone

[redacted]

PRINTED IN U.S.A.

NOTE: Always order by current part number