NuTone®

INSTALLATION INSTRUCTIONS
READ & SAVE THESE INSTRUCTIONS!

Bathroom Exhaust Fan/Fluorescent Light Combination

MODEL: 769RF

IMPORTANT SAFETY INSTRUCTIONS

WARNING: TO REDUCE THE RISK OF FIRE. ELECTRIC SHOCK, OR INJURY TO PERSONS, OBSERVE THE FOLLOWING:

A. Use this unit only in the manner intended by the manufacturer. If you have questions, contact the manufacturer.

B. Before servicing or cleaning unit, switch power off at service panel and lock service panel to prevent power from being switched on accidentally.
When the service disconnecting means cannot be locked, securely fasten a prominent warning device, such as a tag, to the service panel.

CAUTION:
For general ventilating use only. Do not use to exhaust hazardous or explosive materials and vapors.

INSTALLATION INSTRUCTIONS

WARNING: TO REDUCE THE RISK OF FIRE, ELECTRIC SHOCK, OR INJURY TO PERSONS, OBSERVE THE FOLLOWING:

A. Installation work and electrical wiring must be done by qualified person(s) in accordance with all applicable codes and standards, including fire-rated construction.

B. Sufficient air is needed for proper combusition and exhausting of gases through the flue (chimney) of fuel burning equipment to prevent back drafting. Follow the heating equipment manufacturer's guideline and safety standards such as those published by the National Fire Protection Association (NFPA), and the American Society for Heating, Refrigeration and Air Conditioning Engineers (ASHRAE), and the local code authorities.

C. When cutting or drilling into wall or ceiling, do not damage electrical wiring and other hidden utilities.

D. Ducted fans must always be vented to the outdoors.

E. If this unit is to be installed over a tub or shower, it must be marked as appropriate for the application.

F. NEVER place a switch where it can be reached from a tub or shower.

- The exhaust fan consists of the housing, power unit/blower assembly (motor, wheel, mounting plate,) grille/lens assembly, reflector/lamp plug assembly (lamps not furnished) and duct collar.
- **WARNING: To reduce the risk of fire or electric shock, do not use this fan with any solid-state speed control device.**
- Not for use in kitchens.

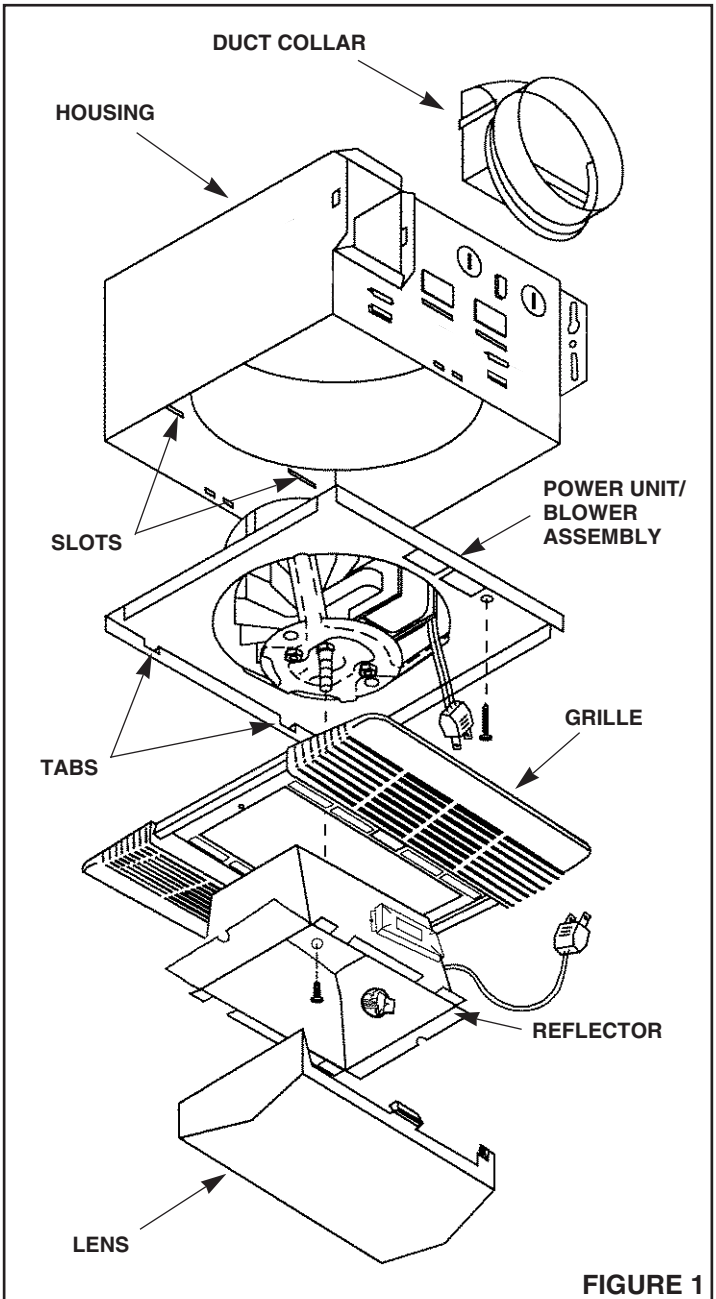

FIGURE 1

FOR BEST RESULTS

When installing the Exhaust Fan/Light in a new construction site, install housing during the rough-in construction of the building. The blower unit and grille should be installed after the finished ceiling is in place.

To install the Exhaust Fan/Light in an existing finished building see instructions page 4.

- **SUITABLE FOR USE OVER A TUB OR SHOWER WHEN INSTALLED IN A G.F.C.I. PROTECTED BRANCH CIRCUIT.**

PLANNING DUCTWORK AND WIRING

DUCTWORK

1. Use 4" round duct.
2. Plan to run duct from the fan's discharge opening to the outside. For best fan performance, make duct run as short as possible and use minimum number of elbows.
3. Use optional NuTone ducting accessories as needed (refer to NuTone's catalog for a complete listing of optional accessories).

WIRING

Plan to run 120vAC house wiring (with ground) from a power source, through a standard wall switch or an optional NuTone double FAN/LIGHT switch, to the junction box in the Fan-Light's housing.

INSTALLATION IN A NEW CONSTRUCTION SITE

PREPARATION

1. Unplug the power unit.
2. **Refer to Figure 1.** Remove power unit/blower assembly from the housing. Remove screw and pull power unit assembly tabs out of slots in housing. Set unit aside until needed.
3. Remove one of the wiring knockouts from housing.

MOUNTING THE HOUSING

USING SIDE MOUNTING TABS

Refer to Figure 2.

1. Locate housing next to ceiling joist.
2. Use wood screws (not provided) to loosely attach housing to ceiling joist through keyhole slots in mounting tabs.
3. Adjust housing so that it will be flush with the finished ceiling.
4. When housing is properly adjusted, tighten screws in slots.

USING HANGER BARS

(Hanger bars sold separately, order model HB4)
Refer to Figure 3.

1. Insert hanger bars in slots provided in housing.
2. Locate fan housing between ceiling joists so that bottom of fan housing is even with the planned finished ceiling.
3. Use screws or nails to secure mounting brackets to ceiling joists.

INSTALLING DUCTWORK

1. **Refer to Figure 1.** Place duct collar over flanges at discharge opening of fan. Secure collar by snapping tabs into slots in flanges.
2. **Refer to Figure 4.** Run 4" round duct from outside to fan's discharge opening.
3. Connect duct to duct collar.

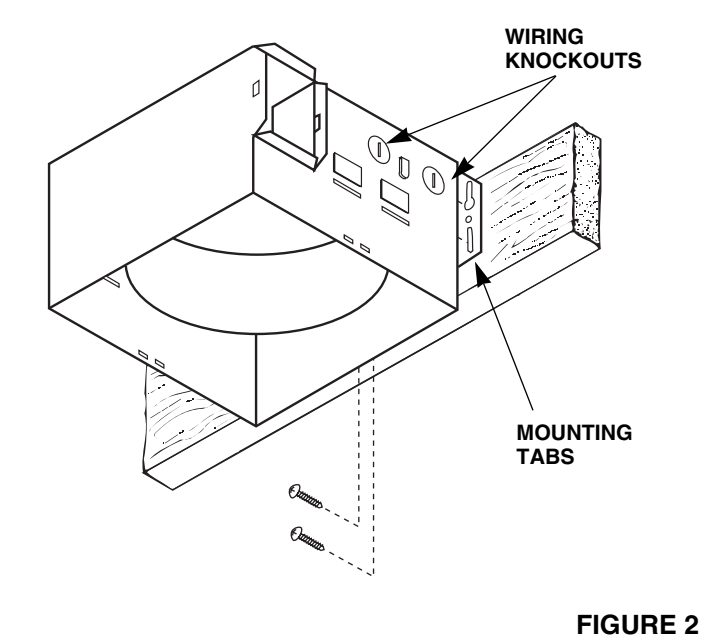

FIGURE 2

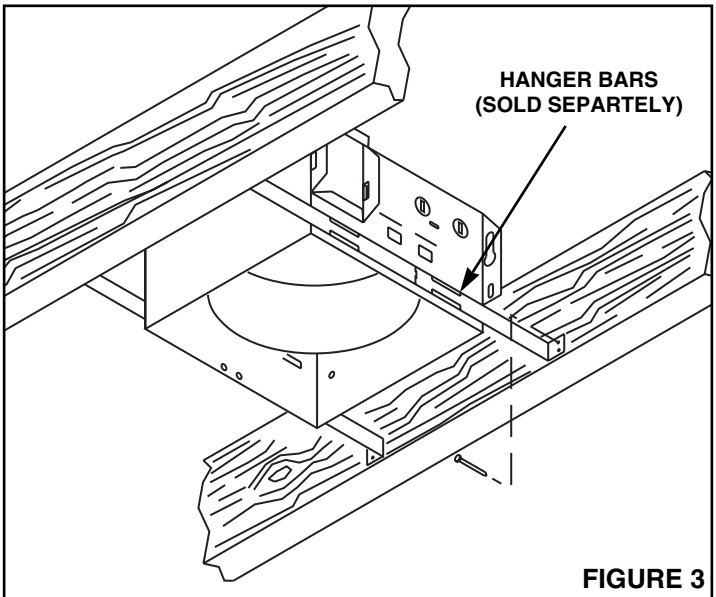

FIGURE 3

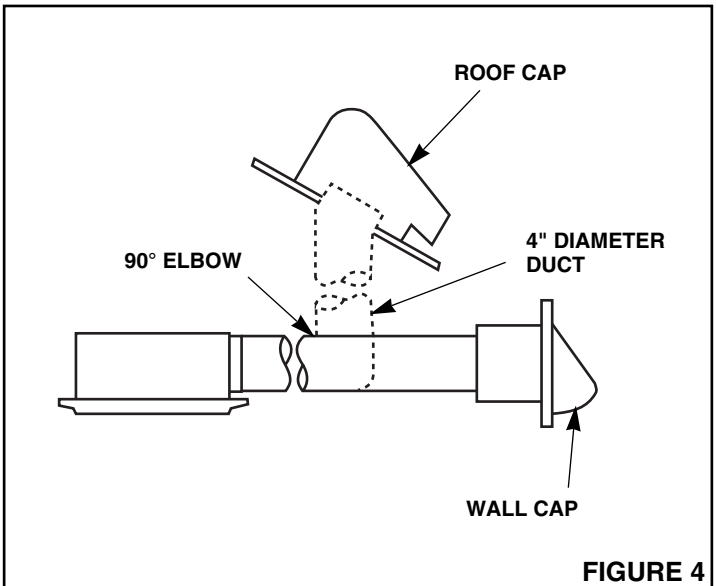

FIGURE 4

WIRING

Refer to Figures 5 and 6.

All wiring must comply with local codes and unit must be properly grounded.

1. Run 120vAC house wiring (with ground) from wall switch to fan location.
2. Insert and secure an approved box connector into wiring entrance hole.
3. Pull wires through box connector and into junction box. Tighten box connector.
4. If a single switch will be used to control both the fan and the light, make wiring connections as shown in Figure 5. If a double switch will be used for separate control of the fan and light, make connections as shown in Figure 6.

   NOTE: If a double switch is used, the wiring connections determine which receptacle will b e used for the fan motor plug and which receptacle will be used for the light plug. Make note of this when making the wiring connections.
5. Connect the green (or bare) ground wire to the green ground lead.

POWER/BLOWER UNIT INSTALLATION

Refer to Figure 7.

1. Place power/blower unit into housing so that mounting plate's tabs insert into slots in housing.
2. Press other end of mounting plate down until it is firmly seated over scroll and plug-in receptacles.
3. Secure mounting plate to housing with provided screw.
4. Insert motor plug into junction box receptacle.

COMPLETING INSTALLATION

Refer to Figure 8.

1. Remove wing nut from the threaded bolt on motor mounting strap.
2. Place reflector into grille.
3. Align grille/reflector assembly with housing and insert light plug into receptacle in junction box.
4. Using wing nut, secure grille/reflector assembly to motor mounting strap.
5. Install lamp NEMA type CFQ13W/GX23/827 (not provided) into socket.
6. Install lens by squeezing both sides and inserting lens tabs into slots in grille.

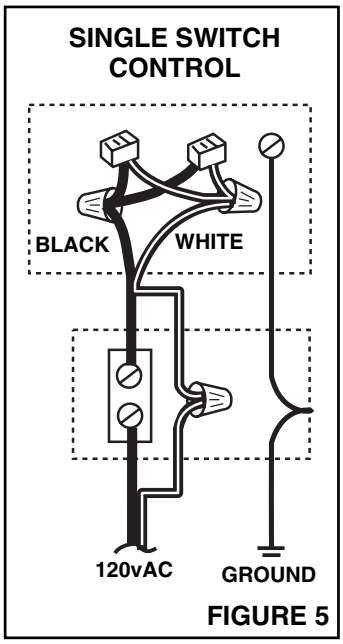

FIGURE 5

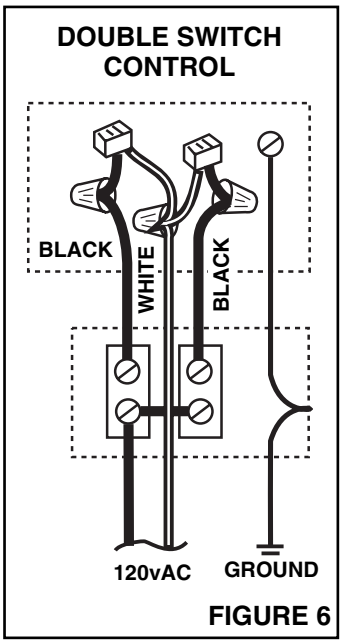

FIGURE 6

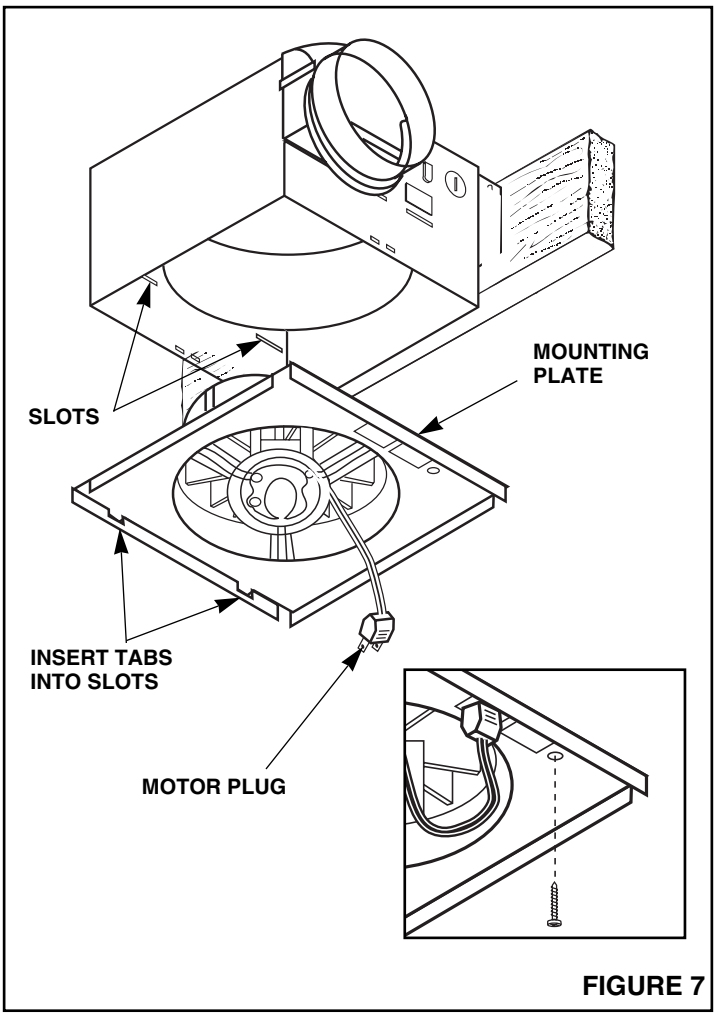

FIGURE 7

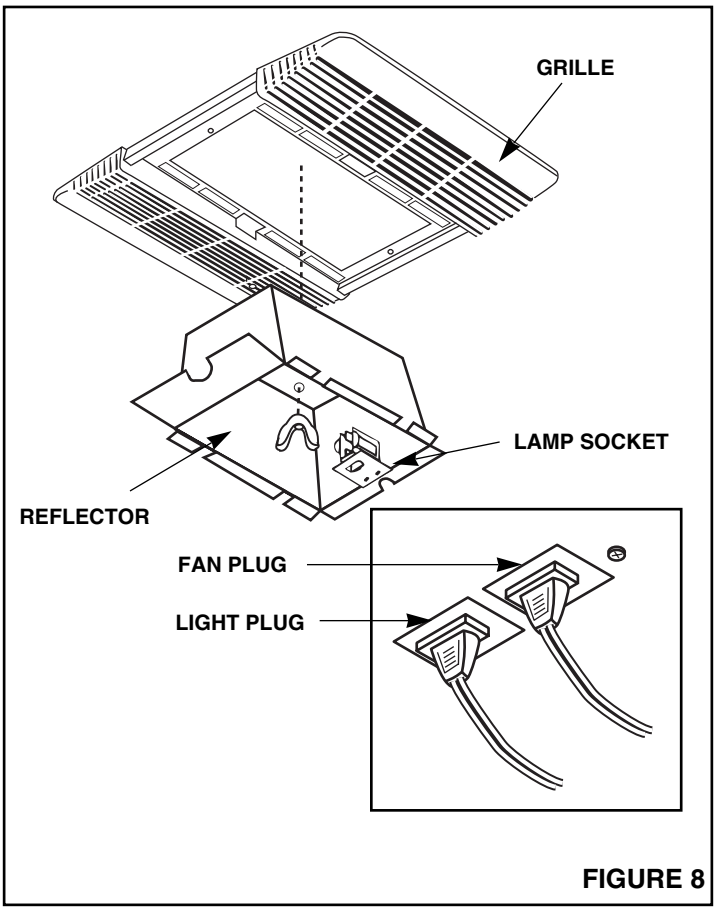

FIGURE 8

INSTALLATION IN EXISTING CONSTRUCTION

PLANNING

Installing a bathroom exhaust fan-light in a finished house requires at least a small accessible area (attic or crawl space) above the planned installation location.

Review “INSTALLATION IN A NEW CONSTRUCTION SITE” AND FOLLOW ALL INSTRUCTIONS WHICH APPLY TO YOUR INSTALLATION.

LOCATION: Locate fan-light next to a ceiling joist.

WIRING AND DUCTING: Refer to Figures 5 and 6 for wiring and to Figure 4 for ducting. Plan ducting and wiring before proceeding with installation.

CAUTION: Check area above planned location to be sure that:

(1) Ducting can be installed or that area is sufficient for proper venting. The ceiling joists should run toward an outside wall.
(2) Wiring can be run to the planned location.
(3) No wiring or other obstruction might interfere with installation.

INSTALLATION

1. The fan light must be mounted to a ceiling joist. Decide where you want to locate the fan-light and then determine if there is a ceiling joist near.
   LOCATING JOIST: Lightly tap the ceiling. A hollow sound means no joists, a solid sound means a joist is present. To be sure you have located a joist, drill a small hole (1⁄16") and probe into the ceiling with a wire. Leave wire in hole to help locate it in the attic or crawl space.
2. Locate hole in attic or crawl space. Make sure hole is within 9" of joist.
3. From below, saw a line from hole to joist.
4. Using the housing as a template, mark the ceiling for the cutout. Cutout dimensions: 9⅛" x 9⅛". One side of cutout must be right next to joist.
5. Make cutout along marked line.
6. In attic or crawl space, run 4" round duct from outside to cutout location.
7. Run wiring to cutout location.
8. Place housing into cutout and secure housing to joist. Make sure housing is flush with finished ceiling. Connect duct.
9. From below, connect wiring. Install power/blower unit, grille/reflector assembly, fluorescent lamp and lens.

NuTone®

One Year Limited Warranty

WARRANTY OWNER: NuTone warrants to the original consumer purchaser of its products that such products will be free from defects in materials or workmanship for a period of one (1) year from the date of original purchase. **THERE ARE NO OTHER WARRANTIES, EXPRESS OR IMPLIED, INCLUDING, BUT NOT LIMITED TO, IMPLIED WARRANTIES OF MERCHANTABILITY OR FITNESS FOR A PARTICULAR PURPOSE.**

During this one year period, NuTone will, at its option, repair or replace, without charge, any product or part which is found to be defective under normal use and service. THIS WARRANTY DOES NOT EXTEND TO FLUORESCENT LAMP STARTERS OR TUBES, FILTERS, DUCT, ROOF CAPS, WALL CAPS AND OTHER ACCESSORIES FOR DUCTING. This warranty does not cover (a) normal maintenance and service or (b) any products or parts which have been subject to misuse, negligence, accident, improper maintenance or repair (other than by NuTone), faulty installation or installation contrary to recommended installation instructions.

The duration of any implied warranty is limited to the one year period as specified for the express warranty. Some states do not allow limitation on how long an implied warranty lasts, so the above limitation may not apply to you.

NUTONE’S OBLIGATION TO REPAIR OR REPLACE, AT NUTONE’S OPTION, SHALL BE THE PURCHASER’S SOLE AND EXCLUSIVE REMEDY UNDER THIS WARRANTY. NUTONE SHALL NOT BE LIABLE FOR INCIDENTAL, CONSEQUENTIAL OR SPECIAL DAMAGES ARISING OUT OF OR IN CONNECTION WITH PRODUCT USE OR PERFORMANCE. Some states do not allow the exclusion or limitation of incidental or consequential damages, so the above limitation or exclusion may not apply to you. This warranty gives you specific legal rights, and you may also have other rights, which vary from state to state. This warranty supersedes all prior warranties.

WARRANTY SERVICE: To qualify for warranty service, you must (a) notify NuTone at the address stated below or telephone 1/800-543-8687, (b) give the model number and part identification and (c) describe the nature of any defect in the product or part. At the time of requesting warranty service, you must present evidence of the original purchase date.

Date of Installation Builder or Installer

Model No. and Product Description

IF YOU NEED ASSISTANCE OR SERVICE:
For the location of your nearest NuTone Independent Authorized Service Center:
Residents of the contiguous United States Dial Free 1-800-543-8687
Please be prepared to provide:
Product model number • Date and Proof of purchase • The nature of the difficulty
Residents of Alaska or Hawaii should write to: NuTone Inc. Attn: Department of National Field Service, 4820 Red Bank Road, Cincinnati Ohio 45227-1599.
Residents of Canada should write to: Broan-NuTone Canada, 1140 Tristar Drive, Mississauga, Ontario, Canada L5T 1H9.

Rev. 03/2001

NuTone®

Product specifications subject to change without notice.
4820 Red Bank Road, Cincinnati, Ohio 45227
Printed in U.S.A., Rev. 03/2001, Part No. 87550

PARTS LIST

EFFECTIVE DATE	MODEL NUMBER	PRODUCT GROUP
Rev. AUGUST 1999	**769RF**	FAN

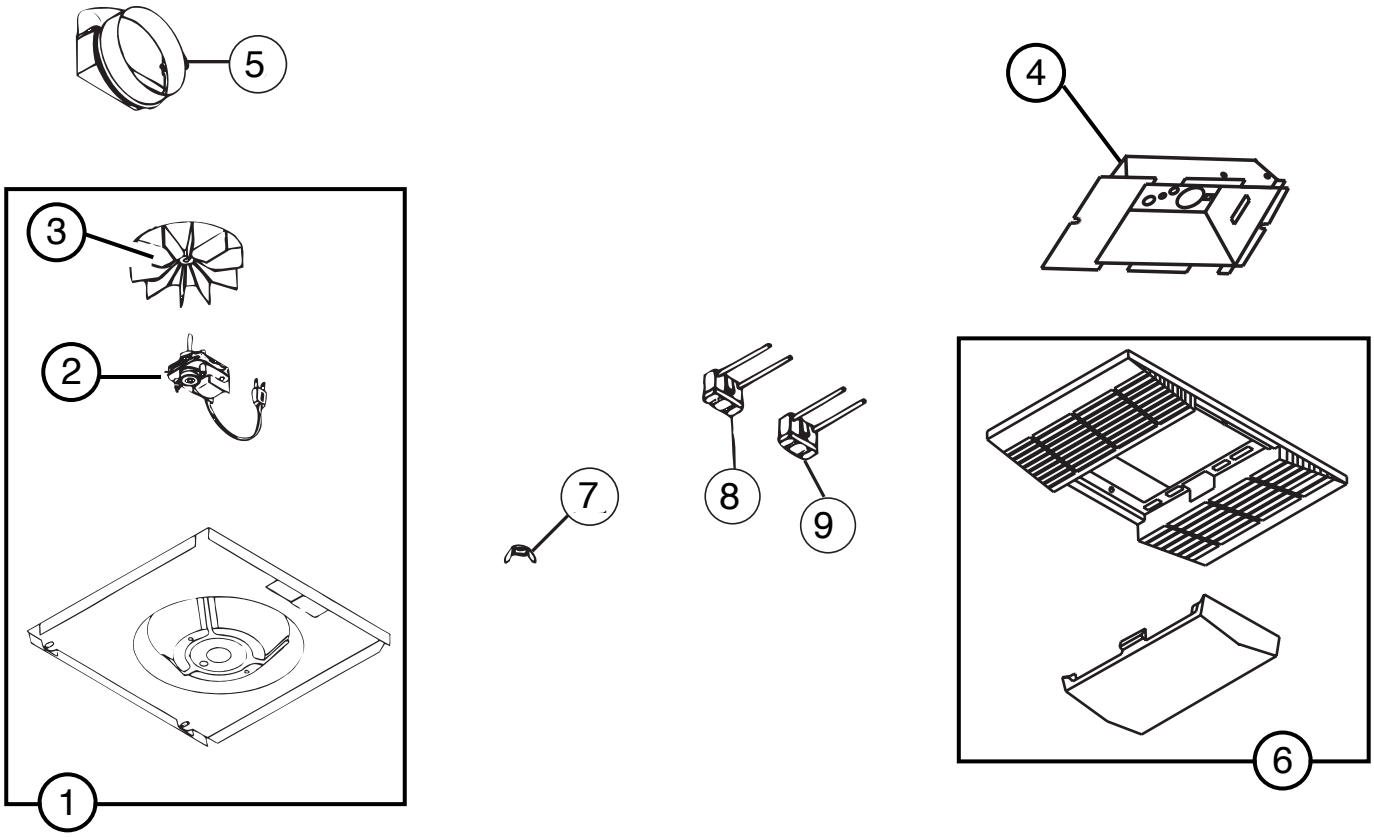

REF.	ORIGINAL PART NO.	PART DESCRIPTION	MODEL USED ON	CURRENT REPLACEMENT PART NO.
1	87546	POWER UNIT ASSEMBLY	769RF	**87546-000**
2	87547	MOTOR	769RF	**87547-000**
3	68739	BLOWER WHEEL	769RF	**68739-000**
4	87549	REFLECTOR ASSEMBLY	769RF	**87549-000**
5	30652	DUCT ADAPTER ASSEMBLY	769RF	**30652-000**
6	85315	GRILLE AND LENS ASSEMBLY	769RF	**85315-000**
7	16133	WING NUT	769RF	**16133-000**
8	10034	FAN RECEPTACLE	769RF	**10034-000**
9	82304	LIGHT RECEPTACLE	769RF	**82304-000**

NOTE: Always order by current part number

NuTone®

NuTone
Attn: Parts Department
4820 Red Bank Rd.
Cincinnati, OH 45227-1599
Phone: (513) 527-5426
Fax: (513) 527-5173